JACUZZI & SUNDANCE SWIM SPAS - INSTALLING A FIXED COVER BRACKET

****IMPORTANT - READ BEFORE INSTALLATION:**

1. The swim spa Cover Bracket may be installed on either end of the swim spa. BOTH LH & RH brackets MUST be installed.
2. The backing board must be cut to a height of 15 7/8" to work on the Jacuzzi J13 & J12 models, and Sundance SD12, SD13 models
3. Cabinet design shown is for reference only, your model may differ

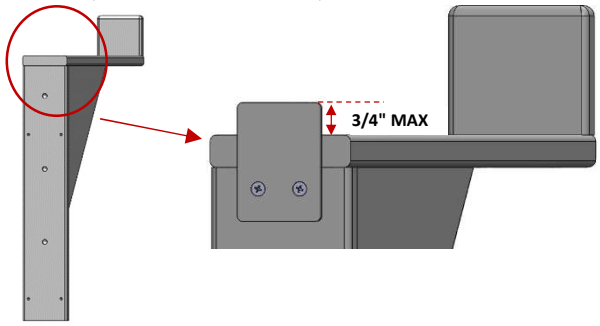

- **Step 1:** Install the aluminum plate centered on the back of the cover lifter bracket using 2X #8-3/4" wood screws. The top of the plate should **NOT** exceed more than 3/4" above the top of the bracket. Repeat this process again on the second cover lifter bracket.

- **Step 2:** Remove the gap lap strips, panel, and hardware. Set aside for later reassembly.

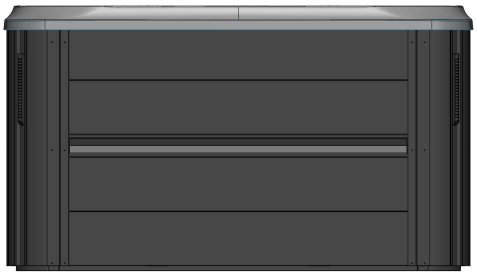

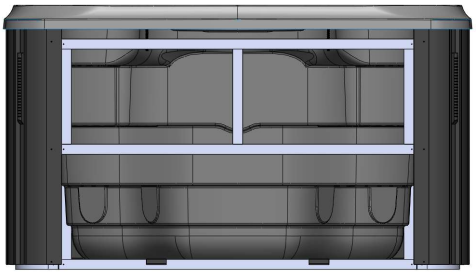

- **Step 3:** Place 1X backing board along the edge of the vertical frame bar. Using 2X black mending plates, position them centered on the backing board, with the mending plate **FLUSH** with the frame edge. Fasten the mending plate using 8X #8-3/4" self drill screws to screw into the frame, and 8X #8-3/4" wood screws to screw into the backing board.



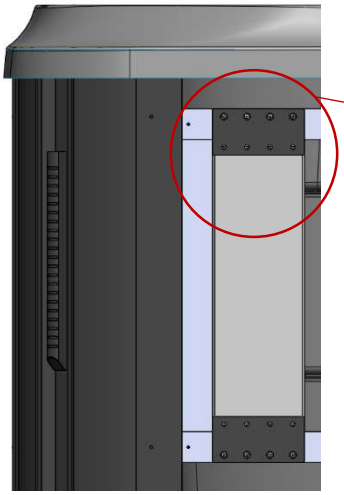

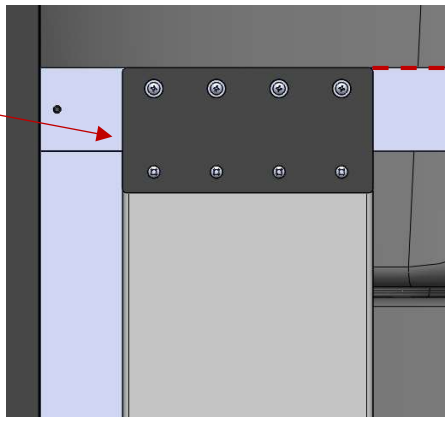

*Repeat on **BOTH** top & bottom of backing board.

- **Step 4:** Repeat step 3 on the opposite side of the frame. Mark the lip of the spa using tape to mark both edges of the backing board. This can help with easier alignment of the cover lifter brackets during install.

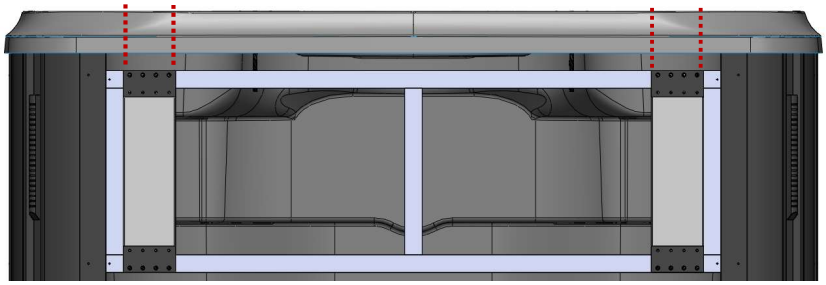

- **Step 5:** Place the panel back onto the swim spa ensuring it is centered with even gaps on each side, and the hook shaped clips on the bottom of the frame are sitting inside the groove on the bottom of the panel (do not install the gap laps as this panel will be removed 1 more time).

- **Step 6:** Place the cover lifter bracket against the panel. Tuck the aluminum plate behind the lip and press upwards so the bottom of the shell lip is touching against the top of the cover bracket (you may need to adjust the aluminum plate height accordingly to achieve this). Ensure the bracket is centered between the backing board (using previous tape marks as a guide).

- **Step 7: **IMPORTANT** If you are installing this on a Sundance SD12 model, skip to step #10.**
⚠ Use a 3/16” drill bit and drill through the panel 4X using the through holes in the cover bracket as a hole jig guide.
DO NOT drill further than the panel into the backing board. Repeat on opposite side.

- **Step 8:** Remove the panel. Using a 1/2" drill bit, drill through the 8X pilot holes previously drilled on the panel, drilling through the panel and foam. Place the panel back onto the swim spa (following Step 5).

- **Step 9:** Using the longer 1.5” spacers, place them through all 8X holes drilled through the panel until they hit the backing board (should be flush to outer panel face).

- **Step 10:** Place the cover bracket back onto the cabinet following step 6. Using the 4X #10-3” flanged hex heads and 4X #10 washers, place them through the cover bracket and spacers and screw into the backing board. Repeat on opposite side.
⚠ ****IMPORTANT** If you are installing this on a Sundance SD12 model, make sure there is clearance behind the backing board such as no hose routings that could be punctured by the 3” screw sticking out 1.5” behind the board.**

- **Step 11:** Screw gap lap back into frame using the pre-existing drill holes in the frame.





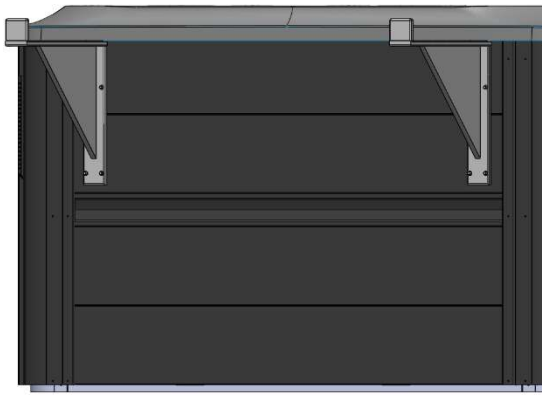

BILL OF MATERIALS					
ITEM	**QTY**	**DESCRIPTION**	**ITEM**	**QTY**	**DESCRIPTION**
1.	8	1.5" NYLON SPACER	6.	8	#10X3" FLANGED HEX HEAD WOOD SCREWS
2.	2	ALUMINUM PLATES	7.	8	#10 WASHERS
3.	4	#8-3/4" COUNTER SUNK WOOD SCREWS	8.	2	COVER BRACKETS
4.	16	#8-3/4" WOOD SCREWS	9.	4	MENDING PLATES
5.	16	#8-3/4" SELF DRILL STEEL SCREWS	10.	2	BACKING BOARD **Backing board must be cut to 15 7/8” to work for Sundance SD12 & Jacuzzi J12, J13 models*